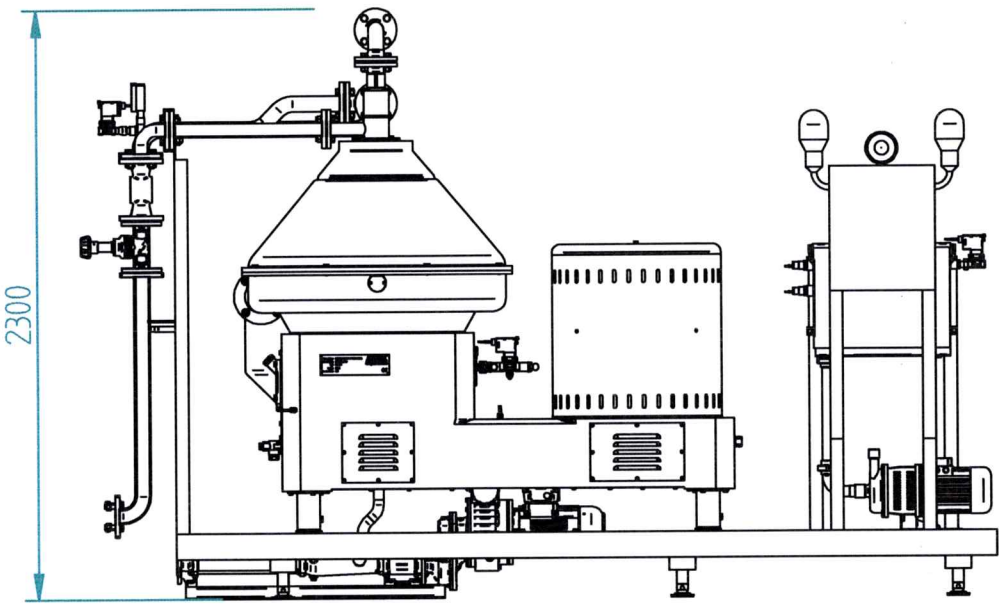

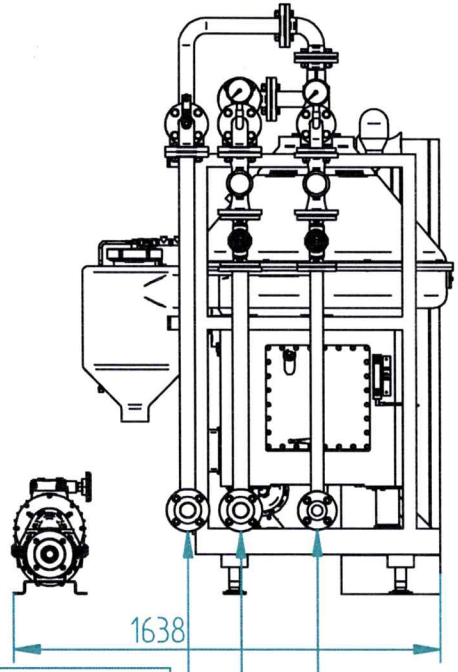

PRODUCT INLET	FLANGE DN50 UNI EN 1092/1
LIGHT PHASE OUTLET	FLANGE DN50 UNI EN 1092/1
HEAVY PHASE OUTLET	FLANGE DN40 UNI EN 1092/1

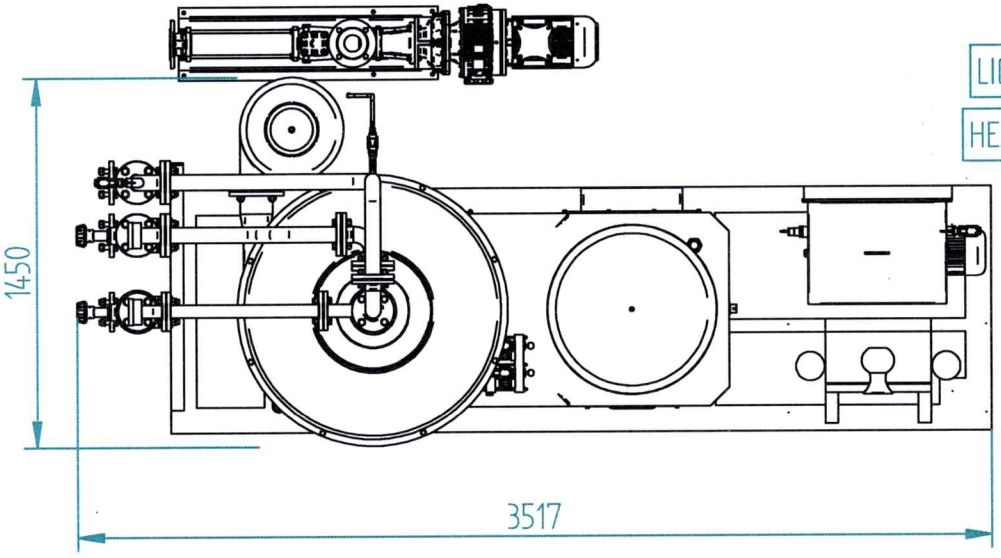

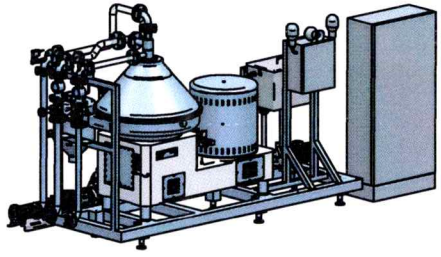

Pos.	Disegno/Drawing No	Denominazione/Denomination	Materiale/material	Dimensioni/Size	Quantità Qty	Peso Weight
–	–	–	–	–	–	–

General tolerances Machined	Raw	Contrassegnati secondo gli standard/ Marked according to standard	Metodo/dimensione Method/Size	Materiale Material	Peso/Weight
Shaft h 12	Shaft h 14	Protezione superficiale Superficial protection	–		2950 kg
Hole H 12	Hole H 14				
Linear J 12	Linear J 14	Tipo macchina Machine type	Sost. il disegno Subst. the design	–	Scala/Scale 1 : 20
Angles ± 30'	Angles ± 1°				

ANDRITZ Separation

DENOMINAZIONE/DENOMINATION: CA 201 AF

Disegnatore Designer	Corrà L.	Data/Date 25/09/2018
Approvazione Approved	Canale M.	

Disegno/Drawing-No	Revision	Page/of
1010847000copy	00	1 / 1

Tutti i diritti sono di proprietà della Andritz Frautech s.r.l.: A termine di legge è vietato riprodurre o comunicare a terzi il contenuto del presente disegno senza la nostra espressa autorizzazione.
All rights are the property of Andritz Frautech s.r.l.: At term law is forbidden to reproduce or communicate to third parties the contents of this design without our express permission.

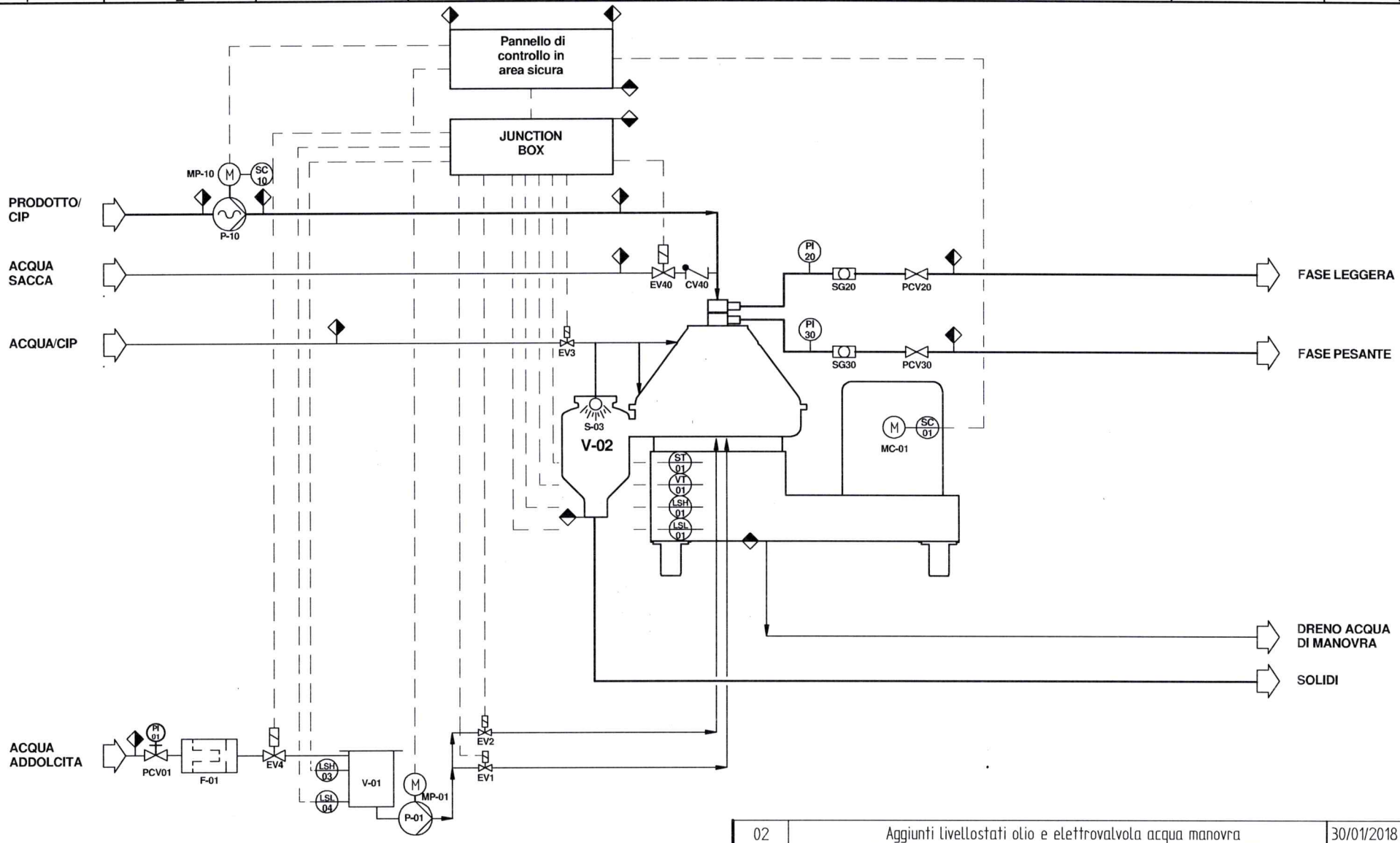

NOTE

Componetistica elettrica in versione EX-proof
Pulsantiera locale EX-proof
Pannello di controllo in zona sicura

ANDRITZ ◆ **CLIENT**

Revision/ Revisione	Description of Revision/Descrizione della Revisione	Date/Data	Author/Autore
02	Aggiunti livellostati olio e elettrovalvola acqua manovra	30/01/2018	VM
01	Aggiunti livellostati acqua di manovra	09/01/2018	VM
00	For execution	22/12/2017	VM

Client/ Cliente	ECOLOGISTICA SERVIZI s.r.l.		
Location/ Località	San Marzano di San Giuseppe	Country/ Paese	Italia
Preparato/ Prepared	Motterle V.	Scale/Scala	1:1
Approved/ Approvato	–	Date/Data	30/01/2018
Titolo/Title	Separatore 3 fasi	Drawing-No/Disegno	P&ID_B82184_CA2D1AF_Ecologistica_rev02
Revision/ Revisione	rev02	Page/of	1 / 1

ANDRITZ Separation

Tutti i diritti sono di proprietà della Andritz Frautech s.r.l.: A termine di legge è vietato riprodurre o comunicare a terzi il contenuto del presente disegno senza la nostra espressa autorizzazione.
All rights are the property of Andritz Frautech s.r.l.: At term law is forbidden to reproduce or communicate to third parties the contents of this design without our express permission.

DELIVERY NOTE
DPR 14-08-96 N.472

ANDRITZ

SHIPPER	DATE	DDT NO.:
ANDRITZ FRAUTECH S.R.L. UNIPERSONALE VIA LUIGI DALLA VIA 15 36015 SCHIO VI	15.05.2018	818 81168223

YOUR ORDER NO.:	accordi con Negri
OUR PROJECT NO.:	C-E1-B82184
OUR ORDER NO.:	C15438
HANDLED BY:	Graziella Preto
TEL.:	+39445575695
EMAIL:	Graziella.Preto@andritz.com

SOLD TO:	SHIP TO:
ECOLOGISTICA SERVIZI S.R.L. S.P. 86 KM 8,900+500 VIA PER SAVA 74020 SAN MARZANO DI SAN GIUSEPPE TA	ECOLOGISTICA SERVIZI S.R.L. S.P. 86 KM 8,900+500 VIA PER SAVA 74020 SAN MARZANO DI SAN GIUSEPPE TA

Type of Shipment	PURCHASING COUNTRY:	IMPORT CUSTOMS CLEARANCE:
	Italy	

CARRIER:	Notes	DESTINATION:
		Italy

DELIVERY TERM:
DAP San Marzano di San Giuseppe, Acc. to Incoterms 2010

NUMBER	TYPE OF PACKING	GR.WEIGHT KG	N.WEIGHT KG	VOLUME M3
5	PACKAGE(S)	3.000	2.780	15,98

FORWARDER:

TrRUCK DATA

Loading Place/Date/Time:

Driver's Signature:

Carrier's Signature:

Recipient's Signature:

POS.	PART NO.	DESCRIPTION	DELIVERED QTY	ORIGIN
10	**C-E1-B82184-501** 300579679		1 PC	
20	100199999	TAMBURO	1 PC	
30	100199999	POMPA	1 PC	
40	100199999	PANNELLO	1 PC	
50	100199999	CHIAVI+RICAMBI	1 PC	

ANDRITZ Frautech S.r.l.Unipersonale
Società soggetta a direzione e coordinazione di ANDRITZ AG
Via Luigi Dalla Via, 15
36015 Schio, Italy
Tel.: +39 0445 575695
Fax: +39 0445 576723
www.andritz.com

Trade register:
HRB

VAT / UID: IT03584750248

Bank account
UniCredit S.P.A.
Bank code: 0200811835
Acc. no. 000101687796
IBAN: IT03T0200811835000101687796
BIC (SWIFT): UNCRITMM

ANDRITZ Separation

F SESC EX20 006 e

EC DECLARATION OF CONFORMITY

(2006/42/EC, Annex II, 1.A)

Manufacturer:

Andritz Frautech S.r.l. Unipersonale
Via Luigi dalla Via, 15
36015 Schio (VI) Italy

Person established in the Community authorized to compile the technical file:

Mauro Canale
Andritz Frautech S.r.l. Unipersonale
Via Luigi dalla Via, 15
36015 Schio (VI) Italy

Description and identification of the machinery:

Product / Article	**Separator, Belt drive**
Model:	**CA 201 AF-0-F-0**
Serial number:	**132959844**
Order number:	**B82184**
Function:	**Liquids / solids separation with automatic solids discharge**

It is expressly declared that the machinery fulfils all relevant provisions of the following EU Directives or Regulations:

Machinery Directive 2006/42/EC

and to the following harmonized standards, standards and / or technical specifications applied:

UNI EN ISO 12100:2010
UNI EN 13849-1:2009
CEI EN 60204-1:2006
EN 12547
EN 12505

Place, Date
Schio,12/04/2018

Signature
Alexandre Martins
Managing Director

NOVA ROTORS
Progressing cavity pumps

Nova Rotors S.r.l
Via Carlo Cattaneo, 19/25 – 36040 Sossano (VI) - ITALY
Phone +39 0444 888151 Fax 39 0444 888152
www.novarotors.com – info@novarotors.com
P.IVA - VAT: 02149270247 – REA: VI-209864
Capital : €1.000.000

ASSEMBLY CONFORMITY DECLARATION ATEX
DICHIARAZIONE DI CONFORMITA' D'ASSIEME ATEX

We, Nova Rotors Srl, hereby declare, that the assembly consisting of pump and auxiliaries:
Noi, Nova Rotors srl dichiariamo che l'assieme costituito da pompa e relativi ausiliari:

PUMP/POMPA: EC Type: Pump and assembly Serial number:	**DN 10L1** Ex II 2G IIB TX CEC 07 ATEX 110 (CE.1131) **A1386301**
MOTOR / MOTORE: EC Type: Serial number:	**CEMP AB30r 100 LA 4** Ex ATEX CE0722 II2G Exd IIB T4 Gb IP55 CESI 00 ATEX 030Q - TÜV IT 14ATEX065X CE0722 **1801492001**
SPEED VARIATOR/VARIATORE: EC Type: Serial number:	**SITI VRD MKF30/1N** Ex ATEX II2 GD1-21;2-22 T4-T_{max} 135° cta **-20 +60°** - ck file 0403 T MAX 125 **60133662**
*In alternative: PROBE / PTO : EC Type: Serial number:	PTE100+PT100 TR50 Ex Included in pump Atex Declaration Nova rotors PTE100 + PTO100 Cover Thermics

*** supplied in alternative: The probe electrical connection and Ohm/Ampere can be different (probe supplied from customer)**
And carrying the following marking on the complete assembly:
E riportante la seguente marcatura d'assieme:

Ex **II 2G IIB** And the temperature **TX** Atex class is **T4 (135°)**

Is constructed, tested and verified in compliance with the **ATEX Directive 94/9/EC** and it suitable for use in a potentially explosive atmosphere within the classified zone limits, in accordance with the declared performance and in compliance with the installation and use instructions.
È realizzata, controllata e verificata in conformità alla direttiva **ATEX 94/9/CE** ed è idonea all'uso in atmosfera potenzialmente esplosiva entro i limiti delle zone classificate, nel rispetto delle prestazioni dichiarate ed in osservanza alle istruzioni d'installazione ed uso.
È composta da componenti conformi ai requisiti e a quanto descritto nella Direttiva Atex 94/9/CE, (fino al 19 Aprile 2016) e direttiva **Atex 2014/34/EU** (dal 19 Aprile 2016)".
Has been assembled with components complying with the relevant Union harmonisation legislation: Atex Directive 94/9/EC (until April 19th, 2016) and **Atex Directive 2014/34/EU** (from April 20th, 2016)".

The equipment is assembled in accordance with the following directive:
L'allestimento è stato realizzato rispettando le normative:EN 13463-1: 2009, EN 13463-5: 2003, EN 13463-6: 2005, EN 13463-8: 2003, EN 1127-1: 2008, EN 60079-0: 2006, EN 60079-1: 2007, EN 60079-7: 2007, EN 61241-0: 2006, EN 61241-1: 2004

Nova Rotors S.r.l.
Managing Director - Amministratore Delegato
Sig.ra Carla Dovigo

Sossano , 22/02/18

NOVA ROTORS
Progressing cavity pumps

Nova Rotors S.r.l
Via Carlo Cattaneo, 19/25 – 36040 Sossano (VI) - ITALY
Phone +39 0444 888151 Fax 39 0444 888152
www.novarotors.com – info@novarotors.com
P.IVA - VAT: 02149270247 – REA: VI-209864
Capital : €1.000.000

DECLARATION OF CONFORMITY
DICHIARAZIONE DI CONFORMITA'

CE

Manufacturer's name Nome del costruttore	**NOVA ROTORS srl**
Manufacturer's address Indirizzo del costruttore	**Via Villa, 29 – 36020 Villaga (VI) – Italy**

Herewith declares conformity of the Products
Dichiara con la presente la conformità del prodotto

Product description: Descrizione del prodotto	Progressing cavity pumps with vertical and horizontal axis **POMPE MONOVITE ad asse verticale e orizzontale**

Marking Marcatura	Ex **II 2G IIB TX**

Certificate Number edit by CEC, Notified Body Number 1131 Numero di certificato emesso da CEC, Organismo Notificato Numero 1131	**CEC 07 ATEX 110 - REV.1**

In accordance with applicable regulations below - Soddisfa la seguente Direttiva:

EC Directive:/ Direttive CEE: **94/9/CE - Atex**

As in accordance to the European Armonized Standards applied when the certificate was issued:
In quanto conforme alle Norme Europee Armonizzate applicabili alla data di emissione del certificato sopra indicato:

EN 13463-1: 2001, EN 13463-5: 2003, EN 13463-6:2005

Toara di Villaga, 06/05/2011

Nova Rotors S.R.L.
Amministratore Delegato – Managing Director
Sigra. Carla Dovigo

Nova Rotors S.r.l
Via Carlo Cattaneo, 19/25 – 36040 Sossano (VI) - ITALY
Phone +39 0444 888151 Fax 39 0444 888152
www.novarotors.com – info@novarotors.com
P.IVA - VAT: 02149270247 – REA: VI-209864
Capital : €1.000.000

Declaration of Conformity / Déclaration de conformité

CE

Manufacturer's name / Nom du fabricant	**NOVA ROTORS S.r.l.**
Manufacturer's address / Adresse du fabricant	Via Carlo Cattaneo, 19/25 – 36040 Sossano (VI) – Italy

Herewith declares conformity of the Products
Déclare la conformité des produits

MODÈLE: **DN 10L1**

SERIAL NUMBER **A1386301**

Product description:	**Progressing cavity** pumps with vertical and horizontal axis
Description du produit	**Pompes à cavité progressive** avec axe vertical et horizontal

Complies with the essential requirements stipulated by the following applying directives:
Conforme aux exigences essentielles prévues par les directives applicables suivantes :

2006/42/CE (Directive Pompe / machinery Directive)

In according to the following harmonized standards / Conforme aux normes harmonisées suivantes :

UNI EN ISO 12100-1:2005	Sécurité de la pompe 1ere Partie / Safety of machinery. Part 1
UNI EN ISO 12100-2:2005	Sécurité de la pompe 2e Partie / Safety of machinery Part 2
UNI EN ISO 809:2009	Pompes et unités de pompes pour liquides / Pumps and pump unit for liquids
UNI EN ISO 13857:2008	Safety distance to prevent danger zones being reached by the upper and lower limbs - Distances de sécurité pour empêcher d'atteindre les zones dangereuses avec les membres supérieurs et inférieurs

2004/108/CE (Electromagnetic Compatibility Directive / Directive sur la Compatibilité Électromagnétique)

2006/95/CE (Low Voltage Equipment Directive / Directive Basse Tension)

In according to the following harmonized standards / Conforme aux normes harmonisées suivantes

CEI EN 60204-1:2006	Electric equipment of machinery - General requirements Équipement électrique des machines - Règles générales.

Operating instructions includes important information for safety, use, installation and maintenance for the machinery
Le mode d'emploi contient des informations importantes pour la sécurité, l'utilisation, l'installation et la maintenance de la pompe.

Sossano, 22/02/18

Mme Carla Dovigo

Chief executive officer - Administrateur délégué
Nova Rotors S.r.l

NOVA ROTORS
Progressing cavity pumps

Nova Rotors S.r.l
Via Carlo Cattaneo, 19/25 – 36040 Sossano (VI) - ITALY
Phone +39 0444 888151 Fax 39 0444 888152
www.novarotors.com – info@novarotors.com
P.IVA - VAT: 02149270247 – REA: VI-209864
Capital : €1.000.000

Company:	MANTOVANI & VICENTINI S.R.L .
Order confirm. N.:	A13867 **of:** 18/01/18
Offer N°:	OFF-18-00280 **Rev.**00 **of:** 18/01/18
Your Order N.:	000158-2018/MV1 **of:** 18/01/2018 17.35.34

Serial number: A1386701-02

PROGRESSIVE CAVITY PUMP
mod.: **DN 40L1** *DIAMOND SERIES*
Wetted casing and rotating parts material:
Casing in G25 - S275JR / W. 1.0044 and rotating parts in AISI 420B / W. 1.4028 - S275JR / W. 1.0044

Classification:
Series ID - Industrial sector EX
PROOF with certificate
II 2G IIB TX

FLUID CHARACTERISTICS

Pumped fluid:	OIL SLURRY
Viscosity:	? cps
Solids concentration:	? %
Solids size:	? mm
Specific gravity:	? kg/dm³
Abrasiveness:	Not very abrasive
PH:	?
Working temperature:	15-65 °C

OPERATING CONDITIONS

Service:	8 h/gg
Rotation:	Counterclockwise viewed from the motor
Differential pressure:	2-3 bar(g)
Suction pressure:	Flooded

Design pressure:	6 bar
Max. power absorbed:	5 KW
Tarting Torque:	250 Nm
Solid passage:	36 soft 18 hard mm
Sound power level:	Not exceed 85 dB(A) measured at 1 m distance at the complete machine

Rotation speed:	330			rpm
Frequency:	50			Hz
Flow:	36			m³/h

CONSTRUCTION AND PUMP MATERIALS

Installation:	Horizontal
Pump body::	UNI 2278/EN 1092 - PN 16 DN100 Standard execution with drain plug G3/4" and with inspection port Cast Iron G25
Outlet connection:	UNI 2278/EN 1092 - PN 16 DN100 Standard connection Cast Iron G25
Stator:	NBR with drill for probe 3/8" BSP (Gas)
Rotor:	Reduced 1 execution

NOVA ROTORS
Progressing cavity pumps

Nova Rotors S.r.l
Via Carlo Cattaneo, 19/25 – 36040 Sossano (VI) - ITALY
Phone +39 0444 888151 Fax 39 0444 888152
www.novarotors.com – info@novarotors.com
P.IVA - VAT: 02149270247 – REA: VI-209864
Capital : €1.000.000

	AISI 420B / W. 1.4028 induction hardened 55-59 HRC -
Joint:	Standard execution Rubber sleeve NBR black food grade
Transmission shaft:	Standard execution AISI 420B / W. 1.4028
Drive shaft:	Standard execution Ø40 with plug-in shaft AISI 420B / W. 1.4028 with hard chrome plated 850-950 HV sp 300 µm
Seal housing:	Standard execution for gland packing - B01 Cast iron G25
Seal:	Standard packing rings Ø65 6 impregnated rings PTFE
Coupling:	Standard execution block construction with shaft seal protections Cast iron G25
Painting:	Antirust and anti-oil immersion primer ≥20µm Two coats finishing bicomponent acrylic based ≥ 80µm Orange RAL 2004

MOTORIZATION

Type:	Coaxial gearbox IEC ATEX with electric motor IEC ATEX Fan cooling motor three-phase P132	
		Brand
Group:	**Model**	NORD
	SK32F P132 F250 Ø40 B5 ATEX i= 4.43	
Motor:	AB30 132MB 7,5KW 4P 3Ph B5 IP56 II 2G Ex d IIB T4 1460 rpm 230V / 400V 50Hz 1752 rpm 260V / 440V 60Hz Temperature class F Thermistor PTC and winding for frequency converter	Cemp
Fan cooling:	Fan cooling motor three-phase P132	Cemp

cemp

Flameproof
Motors

Senago, 29/01/2018

Dichiarazione EU di conformità / EU Declaration of comformity / Declaration UE de conformitè / EU Konformitatserklarung / Declaracion EU de conformidad

I motori elettrici asincroni del tipo / Electric asynchronous motors type / Les moteurs électriques asynchrones type / Elektrische Asynchronmotoren Typ / Los motores eléctricos asíncronos del tipo:

AB30r 100LA 4	**SERIAL N. 1801492001**

che riportano la marcatura / bearing the marks / marqués / Kennzeichnung / que llevan marcado:

CE 0722 Ex II2G Ex db IIB T4 Gb IP55	TUV IT 14ATEX065X

sono stati prodotti da Cemp srl sotto la propria responsabilità in conformità alle seguenti direttive comunitarie / have been manufactured by Cemp srl under his sole responsibilityin accordance with the following EC directives / sont fabriqués par Cemp srl sous sa responsabilité selon les CE directives suivantes / wurden gefertigt unter der Verantwortung von Cemp srl in Übereinstimmung mit den folgenden EG-Vorschriften / han sido fabricados por Cemp srl, bajo su propia responsabilidad, de acuerdo con las siguientes directivas EC:

2014/34/UE (ATEX)	**2014/30/UE (EMC)**	**2006/42/CE (Machinery)(*)**	**2011/65/CE (RoHS)**

e in conformità alle seguenti Norme / and complying with the following Standards / et conforme aux normes suivantes / und sind entsprechend den folgenden Standards / y conforme a las siguientes normas:

EN 60079-0: 2012/A11:2013 - EN 60079-1: 2014 - EN 60079-7: 2007
EN 60079-31: 2014 - IEC 60034-1,5,6,7,8,9,12,14 - IEC 60072

(*) Note / Notes / Note / Bemerkung / Notas:

Direttiva macchine / Machinery Directive / Directive machine / Maschinen-Richtlinie / Directiva Maquinaria:

I motori in oggetto, da considerarsi componenti, sono conformi per progetto alla direttiva se l'installazione è correttamente eseguita dal costruttore della macchina. Il motore non deve essere messo in servizio finchè la macchina in cui è stato incorporato non sia stata dichiarata conforme alla Direttiva Macchine.
Above motors, considered as components, comply by design with the directive providing that installation is correctly performed by the manufacturer of the machinery. The motor must not be put into service until the machinery into which it has been incorporated is declared in conformity with the Machinery Directive
Les moteurs ci-dessus, considérés comme des composants, sont conformes par conception à la directive, si l'installation est correctement exécutée par le constructeur de la machine. Le moteur ne doit pas être mis en service avant que la machine dans laquelle il été incorporé soit déclarée conforme à la Directive Machine.
Für die korrekte Installation der oben genannten Motoren, sowie die dementsprechenden Komponenten, die in ihrer Bauart mit den zu dieser Bescheinigung aufgeführten Vorschriften übereinstimmen, ist der Maschinenhersteller - Betreiber verantwortlich. Die Motoren entsprechen den Vorschriften nur, solang die Anlage, in die sie eingebaut wurden, in Übereinstimmung mit den geltenden Maschinenrichtlinien und Vorschriften errichtet wurde.
Los motores en objeto, por tratarse de componentes, cumplen las normas de la directiva si la instalación está correctamente controlada por el constructor de la máquina. El motor no debe entrar en servicio hasta que la máquina en que ha sido incorporado disponga de la declaración de la Directiva Maquinaria.

L'organismo preposto per la notifica della produzione è : / The Notified body (ExNB) is : / L'organisme chargé de la notification de la production / Abnahmebehörde (Ex) / El Organismo Notificado (ON) es
CESI (0722), Via Rubattino 54, 20134 Milano, ITALY
Notification number : CESI 00 ATEX 030 Q

Massimo Cortellezzi
Operations Manager

REGAL

Cemp Srl
Via Piemonte, 16 - I 20030 SENAGO (MI)
Tel. +39 02 94435401 - Fax +39 02 9989177
E-mail: dte@cemp.eu - Internet www.cemp.eu
C. Fiscale e P. IVA IT 05933500968 - Registro Imprese di Milano 05933500968
REA di Milano n. 1859665 - Capitale Sociale Euro 20.000,00 i.v.
Socio Unico ROTOR BEHEER B.V.

NOVA ROTORS®
Progressing cavity pumps

OPERATING, USE AND MAINTENANCE ISTRUCTIONS FOR PROGRESSING CAVITY PUMPS

SERIES:

DN

DIAMOND

PUMP MODEL : **DN 10L1**

SERIAL NUMBER : **A1386301**

CUSTOMER: **ANDRITZ FRAUTECH S.R.L. UNIPERSONALE**

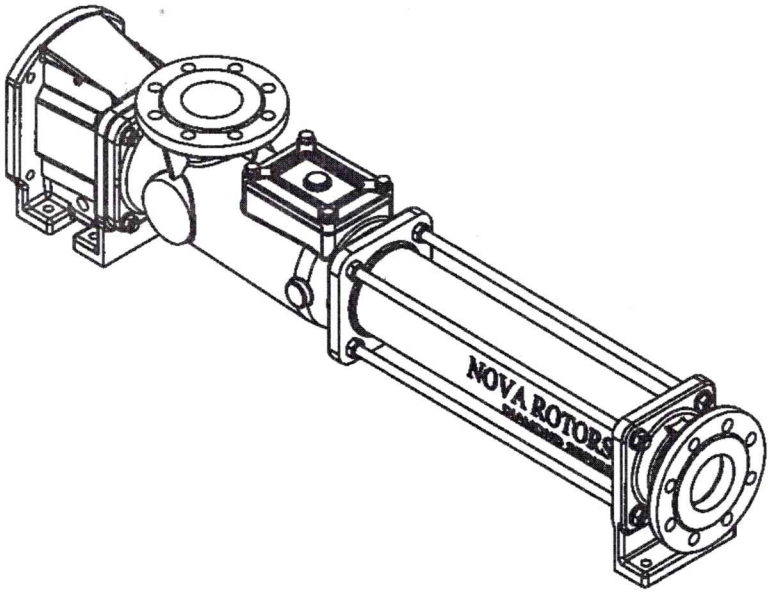

NOVA ROTORS srl
Progressing cavity pumps

ANNEX FOR PUMPS USED IN POTENTIALLY EXPLOSIVE AREAS - ATEX DIRECTIVE 94/9/EC

IN COMPLIANCE WITH STANDARD 94/9/EC POSITIVE DISPLACEMENT /VOLUMETRIC PUMPS CARRY THE FOLLOWING ATEX MARKING:

Ex II 2G IIB TX - REV.1

which provides the following information:

- The apparatus belongs to equipment group II which comprises equipment intended for use in all locations other than mines liable to be endangered by explosive atmospheres.
- The equipment is suitable for use in Zone 1: place in which an explosive atmosphere consisting of a mixture with air of flammable substances in the form of gas, vapour or mist is likely to occur in normal operation occasionally (10 - 1000 hours/year).
- The equipment is constructed in compliance with category 2, that is, areas in which explosive atmospheres caused by gases, vapours or mists are likely to occur.
- For category 2, the level of protection is maintained even in the event of frequently occurring disturbances or equipment faults which normally have to be taken into account.
- The product is suitable for use in explosive atmospheres caused by the presence of gases, vapours or mists.
- The product complies with standards EN 13463-1, EN 13463-5, EN 13463-6, inasmuch as a purely mechanical construction. The addition of Atex certified electrical equipment does not impose further additional assessments of the electrical equipment provided that the combined apparatus (assembly) does not entail further additional dangers. This can only be obtained by following the cabling and connection instructions set out in EN 60079-14.
- The product is suitable for use in environments with gas type IIB (e.g. ethylene).
- In compliance with standard EN 13463-1, the pumps are divided into temperature classes according to the temperature of the pumped liquid and / or the respective heating and cooling agent temperatures for double jacket models. The table indicates the maximum permissible temperature for the process liquid and / or the heating and cooling agent, respectively. All the temperature specifications refer to a maximum ambient temperature of 40 ° C.

Size	Model	Massima temperatura del liquido pompato o del fluido di riscaldamento o raffreddamento	
		T4 (135°C)	T3 (200°C)
D025	2L1 1K2 05K4	90°C	150°C
D030	4L1 2K2 1K4	90°C	150°C
D040	10L1 4K2 2K4 16L1 8K2	90°C	150°C
D060	20L1 10K2 4K4 30L1 16K2	90°C	150°C
D120	40L1 20K2 10K4 60L1 30K2	90°C	150°C
D300	80L1 40K2 20K4 120L1 60K2	90°C	150°C

1 Contents

2 ACCIDENT PREVENTION MEASURES 3
2.1 *GENERAL REQUIREMENTS* 3
2.1.1 TRAINING OF WORKERS 3
2.1.2 WRITTEN INSTRUCTIONS AND PERMITS TO WORK 3
2.2 *EXPLOSION PROTECTION MEASURES* 3
3 CRITERIA FOR THE SELECTION OF EQUIPMENT AND PROTECTIVE SYSTEMS 4
3.1 *PRELIMINARY NOTE* 4
3.2 *SOME OF THE ATEX PUMPS GROUPS AND CATEGORIES* 4
3.2.1 GROUP II - CATEGORY 3 4
3.2.2 GROUP II - CATEGORY 2 4
3.3 *PUMP CATEGORIES ACCORDING TO THE IDENTIFIED HAZARD ZONE* 4
3.4 *EXPLOSION HAZARD AREAS* 5
3.5 *TEMPERATURE CLASS* 5
4 NOVA ROTORS PROGRESSING CAVITY PUMPS 5
4.1 *CLASSIFICATION OF NOVA ROTORS PUMPS* 5
4.2 *PERMISSIBLE PRESSURE* 5
4.3 *NOVA ROTORS PUMPS GROUP II - CATEGORY 2* 5
4.4 *HAZARDOUS COMPONENTS* 5
4.4.1 MOTOR DRIVE UNIT 5
4.4.2 FLEXIBLE COUPLING 6
4.4.3 MECHANICAL SEAL 6
4.4.4 GLAND PACKING SEAL 6
4.5 *ADDITIONAL SAFETY GUIDELINES* 6
4.6 *START UP AND OPERATION* 6

PRELIMINARY NOTE
The purpose of this annex is to supplement and replace, when in conflict, the safety instructions contained in the Use and Maintenance Manual (the "*Manual*") concerning explosion hazard areas.

2 ACCIDENT PREVENTION MEASURES

2.1 GENERAL REQUIREMENTS

- The requirements defined in paragraph 2.2 of this annex apply to the areas classified as potentially hazardous in compliance with the minimum requirements laid down by the Directive 1999/92/EC.
- The same requirements also apply to equipment sited in areas that are not explosion hazards but that are required for or contribute to the safe operation of equipment located in hazardous areas.
- The requirements listed above are complemented by those related to the accident prevention requirements set out in the *Manual*.
- It is mandatory to earth the pump with a shielded conductor cable having a suitable diameter and protected from impact, to the plant where the pump is installed to prevent the accumulation of electrostatic charges.

ADDITIONAL INSTRUCTIONS:

- Remove accumulations of dust and clean with a damp cloth or with antistatic products.
- All the connections must be carried out in compliance with the applicable regulations in the area and the installation site in accordance with reference standard EN 60079-14.
- The equipment has been approved for use in zones with specific characteristics: do not install or use it in different environments from the intended environments.
- Installation, maintenance and repairs must be carried out exclusively by qualified, authorised personnel.
- Carry out maintenance in accordance with the provisions of EN 1127-1:2007.

2.1.1 TRAINING OF WORKERS

The employer must provide those working in places where explosive atmospheres may occur with sufficient and appropriate training with regard to explosion protection.

2.1.2 WRITTEN INSTRUCTIONS AND PERMITS TO WORK

- Work in hazardous places must be carried out in accordance with written instructions issued by the employer in the explosion protection document.
- A system of permits to work must be applied for carrying out both potentially hazardous activities and activities which may interact with other work to cause hazards.
- Permits to work must be issued by a person with responsibility for this function prior to the commencement of work.

2.2 EXPLOSION PROTECTION MEASURES

- Any escape and/or release, whether or not intentional, of flammable gases, vapours and mists which may give rise to explosion hazards must be suitably diverted or removed to a safe place or, if that is not practicable, safely contained or rendered safe by some other suitable method.
- If an explosive atmosphere contains several types of flammable and/or combustible gases, vapours and mists, protective measures shall be appropriate to the greatest potential risk.
- Prevention of ignition hazards must also take account of electrostatic discharges, where workers or the working environment act as charge carrier or charge producer. Workers must be provided with appropriate working clothes consisting of materials which do not give rise to electrostatic discharges that can ignite explosive atmospheres.
- Plant, equipment, protective systems and any associated connecting devices must only be brought into service if the explosion protection document indicates that they can be safely used in an explosive atmosphere. This applies also to work equipment and associated connecting devices which are not regarded as equipment or protective systems within the meaning of Directive 94/9/EC if their incorporation into an installation can in itself give rise to an ignition hazard. Necessary measures must be taken to minimise risks to workers from the physical effects of an explosion.

- Where necessary, workers must be given optical and/or acoustic warnings and withdrawn before the explosion conditions are reached.
- Where required by the explosion protection document, escape facilities must be provided and maintained to ensure that, in the event of danger, workers can leave endangered places promptly and safely.
- Before a workplace containing places/ areas where explosive atmospheres may occur is used for the first time, its overall explosion safety must be verified. Any conditions necessary for ensuring explosion protection must be maintained.
- Such verification must be carried out by persons competent in the field of explosion protection as a result of their experience and/or professional training.
- Where the risk assessment shows it is necessary:
    1. It must be possible, where power failure can give rise to the spread of additional risks, to maintain equipment and protective systems in a safe state of operation independently of the rest of the installation in the event of power failure.
    2. Manual override must be possible in order to shut down the equipment and protective systems incorporated within automatic processes which deviate from the intended operating conditions, provided that this does not compromise safety. Only workers competent to do so may take such action.
    3. On operation of the emergency shutdown, accumulated energy must be dissipated as quickly and as safely as possible or isolated so that it no longer constitutes a hazard.

3 CRITERIA FOR THE SELECTION OF EQUIPMENT AND PROTECTIVE SYSTEMS

3.1 PRELIMINARY NOTE

If the explosion protection document required by the customer based on a risk assessment does not state otherwise, equipment and protective systems for all places in which explosive atmospheres may occur must be selected on the basis of the categories set out in the ATEX Directive 94/9/EC.

3.2 SOME OF THE ATEX PUMPS GROUPS AND CATEGORIES

3.2.1 GROUP II - CATEGORY 3

Includes equipment designed to operate in accordance with the operating parameters established by the manufacturer and to ensure a normal level of safety.
This equipment is intended for use in areas in which explosive atmospheres caused by gases, vapours or mists are unlikely to occur or, if they do occur, are likely to do so only infrequently and for a short period only.

3.2.2 GROUP II - CATEGORY 2

Includes equipment designed to function in accordance with the operating parameters established by the manufacturer and to ensure a high level of safety.
This equipment is intended for use in areas in which explosive atmospheres caused by gases, vapours or mists are likely to occur.
The protection for the equipment in this category ensures the requisite level of protection, even in the event of frequently occurring disturbances or equipment faults which normally have to be taken into account.

3.3 PUMP CATEGORIES ACCORDING TO THE IDENTIFIED HAZARD ZONE

Zone 0, Zone 20	Cat 1
Zone 1, Zone 21	Cat 1 or Cat 2
Zone 2, Zone 22	Cat 1, Cat 2 or Cat 3

3.4 EXPLOSION HAZARD AREAS

Explosion hazard areas are classified into zones based on the frequency and persistence of the potentially explosive atmosphere:

1. ZONE 0 A place in which an explosive atmosphere consisting of a mixture with air of flammable substances in the form of gas, vapour or mist is present continuously or for long periods or frequently.
2. ZONE 1 A place in which an explosive atmosphere consisting of a mixture with air of flammable substances in the form of gas, vapour or mist is likely to occur in normal operation occasionally;
3. ZONE 2 A Place in which an explosive atmosphere consisting of a mixture with air of flammable substances in the form of gas, vapour or mist is not likely to occur in normal operation but, if it does occur, will persist for a short period only.
4. ZONE 20 A place in which an explosive atmosphere in the form of a cloud of combustible dust in air is present continuously or for long periods or frequently.
5. ZONE 21 A place in which an explosive atmosphere in the form of a cloud of combustible dust in air is likely to occur in normal operation occasionally.
6. ZONE 22 A place in which an explosive atmosphere in the form of a cloud of combustible dust in air is not likely to occur in normal operation but, if it does occur, will persist for a short period only.

3.5 TEMPERATURE CLASS

Class	Maximum permissible surface temperature
T3	200°C
T4	135°C

Note: Values valid for machines belonging to Equipment Group II (Cenelec Standard EN 50014).

4 NOVA ROTORS PROGRESSING CAVITY PUMPS

4.1 CLASSIFICATION OF NOVA ROTORS PUMPS

Nova Rotors produces ATEX certified progressing cavity pumps belonging to Group II - Cat 2.

4.2 PERMISSIBLE PRESSURE

See Chap 5.1 of the *Manual.*

4.3 NOVA ROTORS PUMPS GROUP II - CATEGORY 2

This type of pump is fitted with a series of automatic shut down systems to prevent the rotor from dry running which ensures that the stator temperature does not exceed the maximum permissible values indicated in the table on page 1.
To this end all the ATEX pumps have a temperature sensor installed in the stator that shuts off the motor when the maximum permissible temperature is exceeded.
If the temperature limit is exceeded the pump will have to be restarted manually, consequently the services of an operator will be required to restart the pump using the manual control.
For all Nova Rotors pump models the T3-T4 temperature class only applies if preventive maintenance of the temperature sensor is monitored correctly and if, before using it, the temperature sensor is calibrated at 4°C above the operating temperature but never above the temperature indicated in the table on page 1. If the machine is fitted with a PTO sensor, the trip temperature cannot be changed therefore it is decided by Nova Rotors based on an assessment of the environmental and process conditions under which the machine is required to operate.
The maximum ambient temperature must not exceed 40°C and never drop below -20°C.

4.4 HAZARDOUS COMPONENTS

IMPORTANT: The necessary spare parts for each component will be supplied by Nova Rotors. If other parts are used, the company will not accept any responsibility for the product or damage caused by the product.

4.4.1 MOTOR DRIVE UNIT

The drive units are chosen in relation to the degree of protection required for the bare shaft pump.

4.4.2 FLEXIBLE COUPLING

The flexible coupling between the drive unit and the pump is chosen in relation to the degree of protection required for the bare shaft pump.

4.4.3 MECHANICAL SEAL

The mechanical seal is chosen based on the temperature class in which the machine will be operating (T3-T4).
It is possible for the seal to break and the process fluid to leak out; if so, the user must evaluate this possibility and take due measures to ensure that the product does not interact explosively with the external environment.
Inspect the seal periodically and shut off the pump immediately if leaks are detected.
For seals with flushing, the flushing liquid must be compatible with the process fluid.

4.4.4 GLAND PACKING SEAL

The gland packing seals leak a small amount of the product.
The user must evaluate this fact and take due measures to ensure that the product does not interact explosively with the external environment.
For seals with flushing, the flushing liquid must be compatible with the process fluid.

4.5 ADDITIONAL SAFETY GUIDELINES

- The risks have been analysed in accordance with precise conditions imposed by both European standards (13463, 1127) and this manual; the analysis of risks relating to the interface with other system components is referred to the installer.
- The electrical connection of the motor must be made in compliance with the instructions contained in the supplier's user manual.
- Zener barriers or a similar safety system must be installed to prevent the drive unit from exceeding the nominal power.
- The pump/joint/drive unit alignments must be checked after every disassembly; check also that they are perfectly fixed in order to maintain the axis between the pump and the drive unit, with self-tapping bolts or nuts with several safety washers, split safety washers or serrated safety washers. Periodically check the tightening torque of the bolts that secure the individual components to the base (including the screws fastening the joint cover).
- Attention: insufficient or incorrect lubrication of the bearings, if installed, will void the safety requirements of explosion hazards.
- It is strictly prohibited to use the pump with products that are not compatible with the materials used in its construction.

4.6 START UP AND OPERATION

- Check that the pump is filled with the process fluid.
- Check that there are no restrictions at the pump inlet and/or outlet to prevent cavitation and motor overload.
- Check that the pipes are sufficiently resistant and will not deform under the weight of the pump and the intake.
- Check that the pump is clean both inside and outside, especially after a long period of inactivity. Avoid the risk of incrustations.
- Check that the rotation direction is correct.
- Check the earthing of the components.
- Check the lubricant level, where necessary.
- Check that the process oil does not contain any solids of sizes that are incompatible with the machine or that could damage it.
- Check the steel for even the slightest signs of oxidisation and/or ferromagnetic parts.

NOVA ROTORS srl
Progressing cavity pumps

Via Carlo Cattaneo, 19/25
36040 SOSSANO (VI)
ITALY

Telefono: +39-0444-888151
Fax: +39-0444-888152
Mail: info@novarotors.com
Sito web: www.novarotors.com

NOVA ROTORS
Progressing cavity pumps

Nova Rotors S.r.l
Via Carlo Cattaneo, 19/25 – 36040 Sossano (VI) - ITALY
Phone +39 0444 888151 Fax 39 0444 888152
www.novarotors.com – info@novarotors.com
P.IVA - VAT: 02149270247 – REA: VI-209864
Capital : €1.000.000

Declaration of Conformity / Dichiarazione di conformità

CE

Manufacturer's name / Nome del costruttore	**NOVA ROTORS S.r.l.**
Manufacturer's address / Indirizzo del costruttore	Via Carlo Cattaneo, 19/25 – 36040 Sossano (VI) – Italy

Herewith declares conformity of the Products
Dichiara con la presente la conformità del prodotto

MODEL : **DN 10L1**

SERIAL NUMBER : **A1386301**

Product description:	**Progressing cavity** pumps with vertical and horizontal axis
Descrizione del prodotto	**Pompe monovite** ad asse verticale e orizzontale

Complies with the essential requirements stipulated by the following applying directives:
E' conforme ai requisiti essenziali di sicurezza previsti dalle seguenti direttive:

2006/42/CE (Direttiva Macchine / machinery Directive)

In according to the following harmonized standards / In accordo alle seguenti norme armonizzate:

UNI EN ISO 12100-1:2005	Sicurezza del macchinario Parte 1 / Safety of machinery. Part 1
UNI EN ISO 12100-2:2005	Sicurezza del macchinario Parte 2 / Safety of machinery Part 2
UNI EN ISO 809:2009	Pompe e gruppi di pompaggio per liquidi / Pumps and pump unit for liquids
UNI EN ISO 13857:2008	Distanze di sicurezza per impedire il raggiungimento di zone pericolose con gli arti superiori e inferiori - Safety distance to prevent danger zones being reached by the upper and lower limbs

2004/108/CE (Direttiva sulla Compatibilità Elettromagnetica / Electromagnetic Compatibility Directive)

2006/95/CE (Direttiva Bassa Tensione / Low Voltage Equipment Directive)

In according to the following harmonized standards / In accordo alle seguenti norme armonizzate

CEI EN 60204-1:2006	Equipaggiamento elettrico delle macchine - Regole generali. Electric equipment of machinery - General requirements

Le istruzioni operative riportano importanti informazioni per la sicurezza, l'uso, l'installazione e la manutenzione della macchina.
Operating instructions includes important information for safety, use, installation and maintenance for the machinery

Sossano, 21/02/18

Sigra. Carla Dovigo

Amministratore Delegato – Chief executive officer
Nova Rotors S.r.l.

SITI SPA
SOCIETA ITALIANA TRASMISSIONI INDUSTRIALI ®

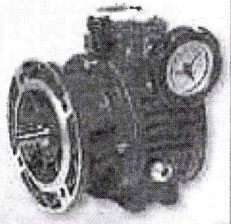

K-MK

MANUALE ISTRUZIONI E RICAMBI
VARIATORI MECCANICI

04.2013

RIDUTTORI - VARIATORI - MOTORI ELETTRICI - GIUNTI ELASTICI GEARBOXES - SPEED VARIATORS - ELECTRIC MOTORS COUPLINGS
SITI SPA
40053 VALSAMOGGIA
Loc. Monteveglio (Bo) (Italy)
Via Giuseppe Di Vittorio, 4
Tel. (+39 051 6714911
Fax (+39 051 6714948
E-mail: info@siti-riduttori.it

Valsamoggia, 02/05/2016

DICHIARAZIONE di CONFORMITA' CE
ai sensi della Direttiva 2014/34/UE ATEX – Allegato VIII
CONTROLLO DI FABBRICAZIONE INTERNO

oggetto: Variatori di velocità, serie **K-MK**

La SITI S.p.A. dichiara sotto la propria responsabilità di aver preso le misure necessarie affinchè il processo di fabbricazione garantisca la conformità dei prodotti in oggetto alla documentazione tecnica depositata ed ai requisiti ad essi applicabili della Direttiva 2014/34/UE.
La documentazione tecnica è depositata presso il CESI, organismo notificato, col numero di identificazione 0403, come richiesto dalla citata direttiva all'articolo 13 per gli apparecchi non elettrici.
I variatori in oggetto possono essere impiegati in ambienti la cui atmosfera sia potenzialmente esplosiva per la presenza di gas(G) o polveri(D) con concentrazioni massime classificate rispettivamente come zona 1 e 21.
Gli standards applicati sono:

- EN 13463-1 metodo di base e requisiti
- EN13463-5 per la sicurezza costruttiva (c)
- EN 13463-8 per l'immersione in liquidi (k)
- UNI EN 1127-1 per la valutazione rischi

La marcatura dei variatori riporta oltre alla serie, al rapporto di riduzione, all'anno di costruzione anche la sottoindicata indicazione ai fini ATEX:

Ⓔx II2 GD1-21;2-22 T4-T_{max} 135° ck file 0403

I variatori sono comunque destinati ad essere integrati in un'altra macchina ed il loro utilizzo non è consentito fino a quando non è stabilita la conformità del prodotto finale alla Direttiva 2006/42/CE. La presente Dichiarazione non assicura le caratteristiche del prodotto ai sensi della legge per la responsabilità del produttore. Occorre osservare le istruzioni di sicurezza fornite con la documentazione del prodotto.

re: Variators, type **K-MK**

SITI S.p.A. declares in sole responsability to have adopted the necessary measures in order that the manufacturing process guarantees the conformity of the products in re to the deposited technical file and to the applicable requirements of the Directive 2014/34/UE.
The technical file is deposited at CESI, notified body, under identification number 0403, as required by the named Directive, art. 13 for non-electric equipments.
The variators may be used in environments whose atmosphere is potentially explosive in presence of gas (G) and/or dust (D) with maximum concentration classified respectevely as Zone 1 and 21.
The applied standards are

- EN 13463-1basic method requirements
- EN 13463-5 safety construction (c)
- EN 13463-8 immersion in fluids (k)
- UNI EN 1127-1 risks valuation

The variators mark shows the type, the reduction ratio, the year of manufacturing and at ATEX purpose

Ⓔx II2 GD1-21;2-22 T4-T_{max} 135° ck file 0403

The variators are intended for fittings in another machine. Commissioning is prohibited until such time as the end product has been proved to conform to the provisions of Directive 2006/42/EC. The Declaration does not give assurance of properties within the meaning of product liability. The safety instructions provided in the product documentation must be observed.

SITI S.p.A.
Marco Guerra - Presidente

cemp

Flameproof
Motors

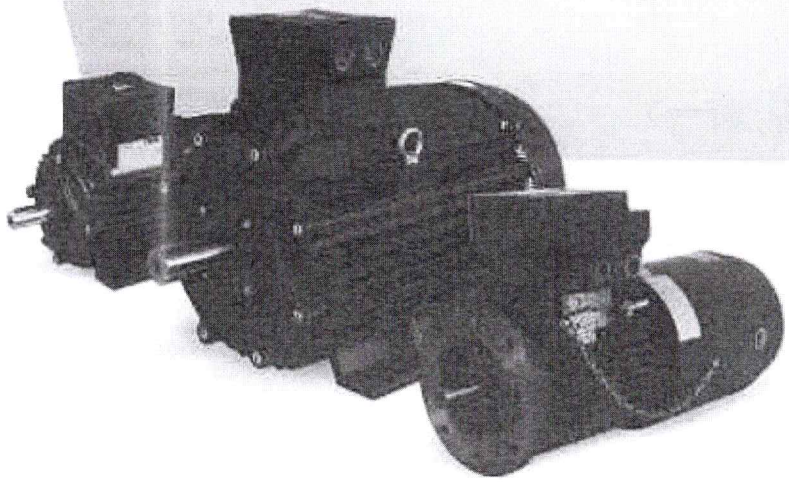

Electric Motors

ATEX safety instructions

A Regal Brand

REGAL

cemp®

Flameproof
Motors

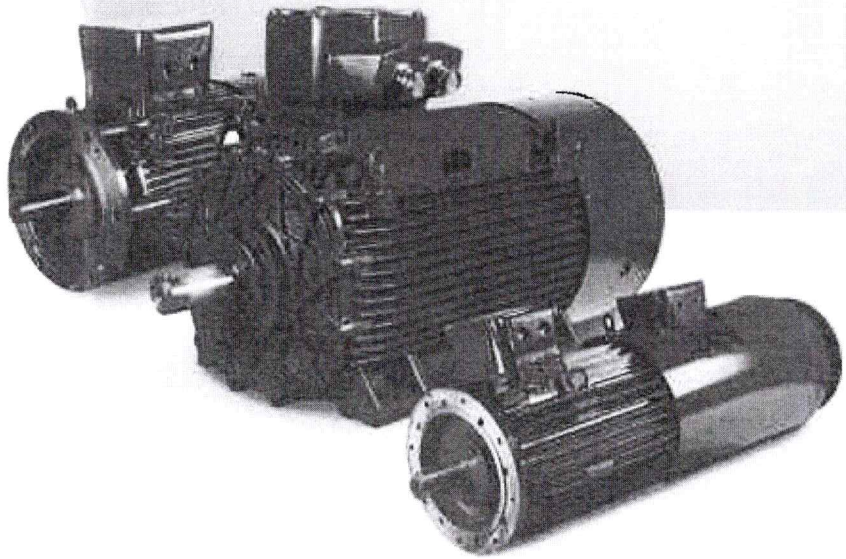

Electric Motors

Instructions for use and maintenance

A Regal Brand

REGAL

Explosion proof connection heads – Single cable entry

Serie TTE100

Technical characteristics:

- **Protection:** Ex II 2GD Ex d IIC Ex tD A21 IP68
- **Certificate of component:** CESI 00 ATEX 008U
- **Production quality assurance notification:** CESI 00 ATEX 024Q
- **Material:** Aluminum die-casting (UNI EN 1706)
- **Temperature range:** - 40 °C / +95 °C
- **Paint type:** Epoxy-polyester, synthetic aluminum enamel, liquid paint
- **Available colours:** RAL colour scale (see product ordering code)
- **Pre-treatment:** Pre-treatment of anti-corrosion (phospho-chromating process) – No hexavalent chromium used
- **IP protection:** IP 66
- **Weight:** <0.44 Kg
- **Standard package:** 50 pieces

- Other threads on request
- Possibility to paint cover and body with different colours
- Cover can be personalized with logo

Tabella di calibrazione per termometri a resistenza PT100 in accordo alle norme IEC 751

Relazione tra resistenza e temperatura

°C	0	1	2	3	4	5	6	7	8	9
-200	18,493									
-190	22,803	22,374	21,944	21,514	21,083	20,653	20,221	19,790	19,358	18,926
-180	27,078	26,652	26,226	25,798	25,372	24,945	24,517	24,089	23,661	23,232
-170	31,320	30,897	30,474	30,051	29,627	29,203	28,779	28,354	27,929	27,504
-160	35,531	35,111	34,691	34,271	33,850	33,429	33,008	32,587	32,165	31,742
-150	39,712	39,297	38,879	38,462	38,044	37,626	37,208	36,789	36,370	35,951
-140	43,865	43,453	43,040	42,627	42,215	41,802	41,389	40,976	40,563	40,150
-130	47,990	47,581	47,172	46,762	46,353	45,943	45,534	45,124	44,715	44,305
-120	52,106	51,698	51,286	50,878	50,469	50,060	49,652	49,243	48,834	48,425
-110	56,190	55,783	55,375	54,967	54,559	54,151	53,742	53,333	52,924	52,515
-100	60,254	59,849	59,443	59,037	58,631	58,225	57,818	57,412	57,005	56,599
-90	64,299	63,895	63,491	63,087	62,683	62,279	61,874	61,469	61,065	60,659
-80	68,325	67,923	67,521	67,119	66,717	66,314	65,911	65,508	65,105	64,702
-70	72,335	71,934	71,534	71,134	70,733	70,332	69,931	69,530	69,128	68,727
-60	76,328	75,930	75,531	75,133	74,735	74,336	73,938	73,539	73,141	72,736
-50	80,307	79,910	79,512	79,115	78,717	78,319	77,921	77,523	77,125	76,727
-40	84,271	83,875	83,479	83,083	82,687	82,291	81,894	81,498	81,098	80,703
-30	88,222	87,829	87,435	87,038	86,645	86,248	85,853	85,458	85,058	84,667
-20	92,160	91,767	91,374	90,980	90,587	90,193	89,799	89,406	89,011	88,617
-10	96,086	95,694	95,302	94,910	94,517	94,125	93,732	93,339	92,946	92,553
0	100,000	99,609	99,218	98,827	98,436	98,045	97,655	97,262	96,870	96,479
0	100,000	100,391	100,781	101,172	101,562	101,953	102,343	102,733	103,123	103,513
10	103,902	104,292	104,681	105,071	105,460	105,849	106,238	106,627	107,016	107,404
20	107,793	108,181	108,570	108,958	109,346	109,734	110,122	110,509	110,897	111,284
30	111,672	112,059	112,446	112,833	113,220	113,607	113,994	114,380	114,767	115,153
40	115,539	115,925	116,311	116,697	117,083	117,468	117,854	118,240	118,625	119,010
50	119,395	119,780	120,165	120,550	120,934	121,319	121,703	122,087	122,471	122,855
60	123,239	123,623	124,007	124,390	124,774	125,157	125,540	125,923	126,306	126,689
70	127,072	127,454	127,837	128,218	128,602	128,984	129,366	129,747	130,129	130,511
80	130,893	131,274	131,655	132,037	132,418	132,799	133,180	133,561	133,941	134,322
90	134,702	135,083	135,463	135,843	136,223	136,603	136,982	137,362	137,741	138,121
100	138,500	138,879	139,258	139,637	140,016	140,395	140,773	141,152	141,530	141,908
110	142,286	142,664	143,042	143,419	143,797	144,175	144,552	144,930	145,307	145,684
120	146,061	146,438	146,814	147,191	147,567	147,944	148,320	148,696	149,072	149,448
130	149,824	150,199	150,575	150,950	151,326	151,701	152,076	152,451	152,826	153,200
140	153,575	153,950	154,324	154,699	155,072	155,446	155,820	156,194	156,568	156,941
150	157,315	157,688	158,061	158,435	158,808	159,180	159,553	159,926	160,298	160,671
160	161,043	161,416	161,787	162,159	162,531	162,903	163,274	163,646	164,017	164,388
170	164,760	165,131	165,501	165,872	166,243	166,613	166,984	167,354	167,724	168,095
180	168,465	168,834	169,204	169,574	169,943	170,313	170,682	171,052	171,420	171,789
190	172,158	172,527	172,895	173,264	173,632	174,000	174,368	174,736	175,104	175,472
200	175,840	176,207	176,575	176,942	177,308	177,676	178,043	178,409	178,777	179,143
210	179,510	179,878	180,242	180,609	180,975	181,340	181,706	182,437	182,803	183,168
220	183,534	183,899	184,264	184,628	184,993	185,358	185,722	186,087	186,451	186,815
230	187,179	187,543	187,907	188,271	188,634	188,998	189,361	189,724	190,088	190,451
240	190,813	191,176	191,539	191,901	192,264	192,626	192,989	193,350	193,712	194,074
250	194,437	194,799	195,159	195,520	195,882	196,243	196,605	196,965	197,326	197,686
260	198,047	198,407	198,768	199,128	199,488	199,848	200,208	200,568	200,927	201,287
270	201,646	202,006	202,365	202,724	203,083	203,442	203,800	204,159	204,517	204,876
280	205,234	205,592	205,950	206,308	206,666	207,024	207,381	207,739	208,096	208,453
290	208,810	209,167	209,524	209,881	210,237	210,594	210,950	211,307	211,663	212,019
300	212,376	212,731	213,088	213,442	213,797	214,152	214,508	214,863	215,218	215,573
310	215,928	216,282	216,637	216,991	217,345	217,700	218,054	218,408	218,762	219,115
320	219,469	219,823	220,176	220,529	220,882	221,235	221,588	221,941	222,294	222,646
330	222,999	223,351	223,703	224,055	224,407	224,759	225,111	225,463	225,814	226,166
340	226,517	226,868	227,219	227,570	227,921	228,272	228,622	228,973	229,323	229,673
350	230,023	230,373	230,723	231,073	231,423	231,772	232,122	232,471	232,820	233,169
360	233,518	233,867	234,215	234,565	234,913	235,261	235,610	235,958	236,306	236,654
370	237,002	237,349	237,697	238,044	238,392	238,739	239,086	239,433	239,780	240,127
380	240,473	240,820	241,166	241,513	241,859	242,205	242,551	242,897	243,242	243,588
390	243,933	244,279	244,624	244,969	245,314	245,659	246,004	246,348	246,693	247,038
400	247,382	247,726	248,070	248,414	248,758	249,102	249,445	249,789	250,132	250,476
410	250,819	251,162	251,505	251,848	252,190	252,533	252,875	253,218	253,560	253,902
420	254,244	254,586	254,928	255,269	255,611	255,952	256,294	256,635	256,976	257,317
430	257,658	257,999	258,339	258,680	259,020	259,360	259,700	260,040	260,380	

Relazione tra resistenza e temperatura

°C	0	1	2	3	4	5	6	7	8	9
440	260,720	261,060	261,398	261,738	262,078	262,417	262,757	263,096	263,434	263,773
450	264,112	264,450	264,789	265,466	266,803	266,141	266,479	266,817	267,154	
460	267,492	267,829	268,167	268,504	268,841	269,178	269,514	269,851	270,188	270,524
470	270,860	271,197	271,533	271,869	272,204	272,540	272,876	273,211	273,547	273,882
480	274,217	274,552	274,887	275,222	275,557	275,891	276,226	276,560	276,894	277,228
490	277,562	277,896	278,230	278,564	278,897	279,231	279,564	279,897	280,230	280,563
500	280,896	281,229	281,561	281,894	282,226	282,558	282,891	283,223	283,555	283,886
510	284,218	284,550	284,881	285,213	285,544	285,875	286,206	286,537	286,868	287,199
520	287,529	287,859	288,189	288,519	288,849	289,178	289,508	289,837	290,166	290,495
530	290,824	291,153	291,482	291,811	292,140	292,468	292,797	293,125	293,453	293,782
540	294,110	294,438	294,766	295,094	295,422	295,750	296,078	296,405	296,733	297,060
550	297,387	297,715	298,042	298,370	298,697	299,023	299,350	299,676	300,003	300,329
560	300,655	300,980	301,305	301,631	301,956	302,282	302,607	302,932	303,257	303,582
570	303,907	304,231	304,556	304,880	305,204	305,528	305,852	306,176	306,500	306,824
580	307,147	307,471	307,794	308,117	308,440	308,763	309,086	309,409	309,732	310,054
590	310,376	310,698	311,021	311,343	311,666	311,987	312,309	312,630	312,951	313,273
600	313,594	313,915	314,236	314,557	314,878	315,198	315,519	315,839	316,160	316,480
610	316,800	317,120	317,440	317,760	318,079	318,399	318,718	319,037	319,356	319,675
620	319,994	320,312	320,631	320,950	321,268	321,587	321,905	322,224	322,541	322,859
630	323,177	323,495	323,812	324,130	324,447	324,764	325,081	325,398	325,715	326,032
640	326,348	326,665	326,981	327,297	327,614	327,930	328,245	328,561	328,877	329,192
650	329,508	329,823	330,138	330,453	330,768	331,083	331,398	331,713	332,027	332,342
660	332,656	332,970	333,284	333,598	333,912	334,225	334,539	334,852	335,166	335,479
670	335,792	336,105	336,418	336,731	337,043	337,356	337,668	337,981	338,293	338,605
680	338,917	339,229	339,540	339,852	340,164	340,475	340,786	341,097	341,408	341,719
690	342,030	342,341	342,651	342,962	343,272	343,582	343,892	344,202	344,512	344,822
700	345,132	345,441	345,751	346,060	346,369	346,678	346,987	347,296	347,604	347,913
710	348,222	348,530	348,838	349,146	349,454	349,762	350,070	350,378	350,685	350,993
720	351,300	351,607	351,914	352,221	352,528	352,835	353,141	353,448	353,754	354,060
730	354,367	354,673	354,979	355,286	355,590	355,896	356,201	356,506	356,812	357,117
740	357,422	357,727	358,031	358,336	358,641	358,945	359,249	359,553	359,857	360,161
750	360,465	360,769	361,073	361,376	361,679	361,983	362,286	362,589	362,892	363,194
760	363,497	363,800	364,102	364,404	364,707	365,009	365,311	365,613	365,914	366,216
770	366,517	366,819	367,120	367,421	367,722	368,023	368,324	368,625	368,926	369,226
780	369,527	369,826	370,127	370,426	370,725	371,025	371,325	371,625	371,924	372,224
790	372,523	372,823	373,121	373,420	373,718	374,017	374,316	374,613	374,912	375,211
800	375,509	375,807	376,105	376,402	376,700	376,997	377,295	377,592	377,889	378,186

Range	Classe A		Classe B	
°C	°C	Ohm	°C	Ohm
-200/0	0,55	0,24	1,30	0,56
-100/0	0,35	0,14	0,80	0,32
0/100	0,15	0,06	0,30	0,12
100/200	0,35	0,13	0,80	0,30
200/300	0,55	0,20	1,30	0,48
300/400	0,75	0,27	1,80	0,64
400/500	0,95	0,33	2,30	0,76
500/600	1,15	0,38	2,80	0,92
600/700	1,35	0,43	3,30	1,08
700/800	1,55	0,48	3,80	1,24
800/850			4,55	1,34

Tolleranze termometri PT100 secondo le norme IEC 60751:2008

Seter srl Fiorano Modenese (Mo) www.seter.it
I dati contenuti nella presente tabella sono indicativi. Seter srl si riserva di modificarli senza preavviso.

Attenzione:
il termoregolatore non è Atex deve quindi essere posto in un pannello di controllo fuori dalla zona esplosiva Atex.
La Nova Rotors, per tale motivo, non risponde di eventuali danni derivanti da:
- installazione/uso diversi da quelli previsti e, in particolare, difformi dalle prescrizioni di sicurezza previste dalle normative Atex 94/9/CE e/o date con il presente.

Eliwell Controls s.r.l.
Via dell'Industria, 15 - Z.I. Paludi
32010 Pieve d'Alpago (BL) ITALY
Telefono: +39 0437 986 111
Facsimile: +39 0437 989 066
www.eliwell.it

Supporto Tecnico Clienti:
Telefono assistenza tecnica: +39 0437 986 300
E-mail: techsuppeliwell@invensys.com

Vendite
Telefono: +39 0437 986 100 (Italia)
+39 0437 986 200 (altri paesi)
Email: saleseliwell@invensys.com

ISO 9001

cod. 9IS44315-0 ◦ ICPlus 902 ◦ IT ◦ rel. 11/13
© Eliwell Controls s.r.l. 2013 ◦ Tutti i diritti riservati.

ICPlus 902

IT **Controllore elettronico a 1 punto di intervento**

Caution:
The controller is not Atex certified and should therefore be placed in a control panel outside the hazardous Atex zone
Nova Rotors shall not be liable for any damages deriving from:
- installation/use other than that prescribed and, in particular, which does not comply with the safety standards specified in the regulations Atex 94/9/CE and/or those given herein.

Eliwell Controls s.r.l.
Via dell'Industria, 15 - Z.I. Paludi
32010 Pieve d'Alpago (BL) ITALY
Telephone: +39 0437 986 111
Facsimile: +39 0437 989 066
www.eliwell.com

Technical Customer Support:
Technical helpline: +39 0437 986 300
E-mail: techsuppeliwell@invensys.com

Sales
Telephone: +39 0437 986 100 (Italy)
+39 0437 986 200 (other countries)
E-mail: saleseliwell@invensys.com

ISO 9001

cod. 9IS44315-1 • ICPlus 902 • EN • rel. 11/13
© Eliwell Controls s.r.l. 2013 • Tutti i diritti riservati.

ICPlus 902

EN **Electronic controller with 1 intervention point**

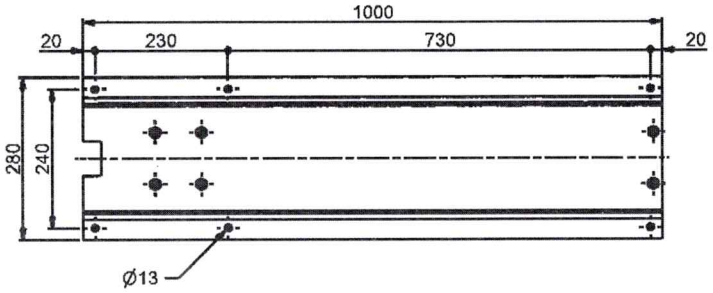

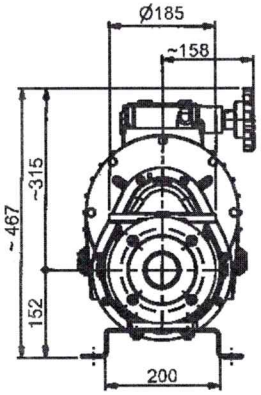

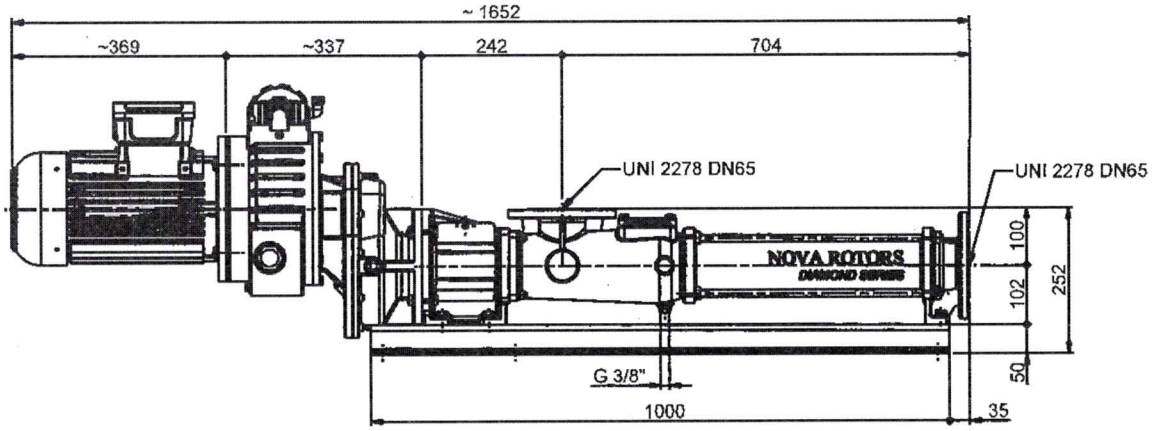

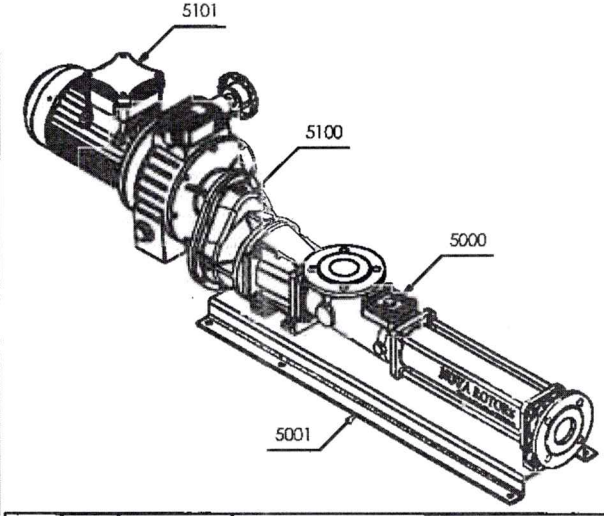

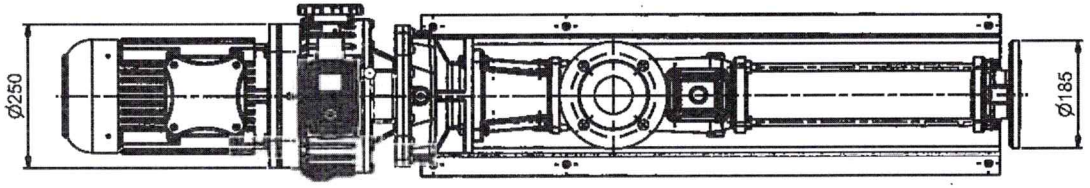

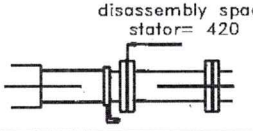

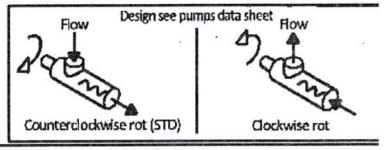

POS	Qty	UNIT	DENOMINATION	Weight
5101	1	Motor	CEMP AB P100	48 kg
5100	1	Variator	SITI MKF 30 / 50-1N F200	62 kg
5001	1	Baseplate	BASE 1000x200	14 kg
5000	1	Pump	DN 10L1-4K2/SIZE040	47 kg

DATE	REV	DESCRIPTION	NAME
19/12/2016	00		SB

Replacement for: DN101G_U1.02.003

Drw Nr.: DN101BUV004

Denomination:
Dimensional Drawing

Replacement by:

Drawn: LG
Date: 01/10/12
Check: SB
Date: 19/12/2016

Scale: 1:13

Weight: N/A

Sheet 1 of 1

General Tollerances ISO 2768-v
Geometrical tollerance and roughness ISO 1302

NOVA ROTORS srl
Progressing Cavity Pumps

www.novarotors.com

This drawing is a Nova Rotors property and is protected in acc. to the law referring to copyright and related laws

NOVA ROTORS srl
Progressing cavity pumps

PDA003 REV. 01
10/09/2012

PERFORMANCE CURVE

Data Based on clean Water 20° C / 65° F

RANGE *DIAMOND SERIES*
SIZE **10L1**

Maximum Pressure based on Abrasivity			
No	Low	Medium	High
6	5	4	3

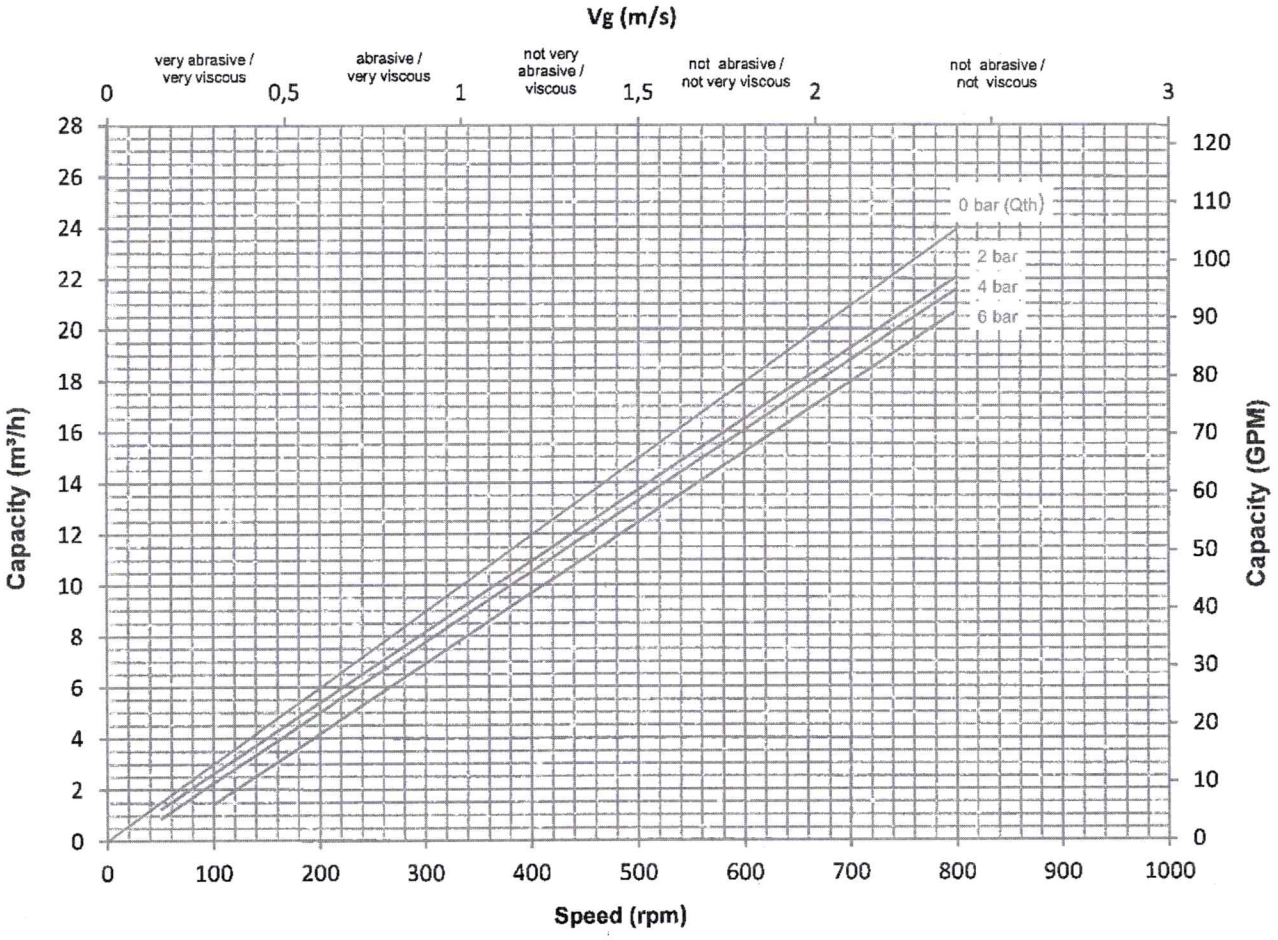

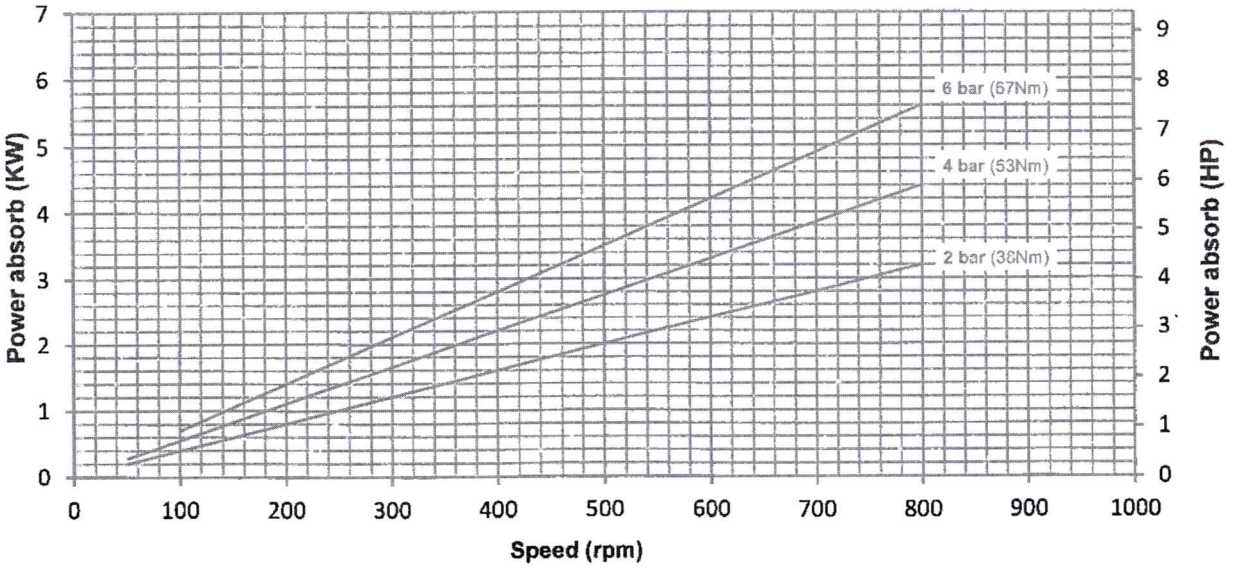

Starting Torque = **90** Nm \ **796,5** lbs*in

Performance tollerance ±10%