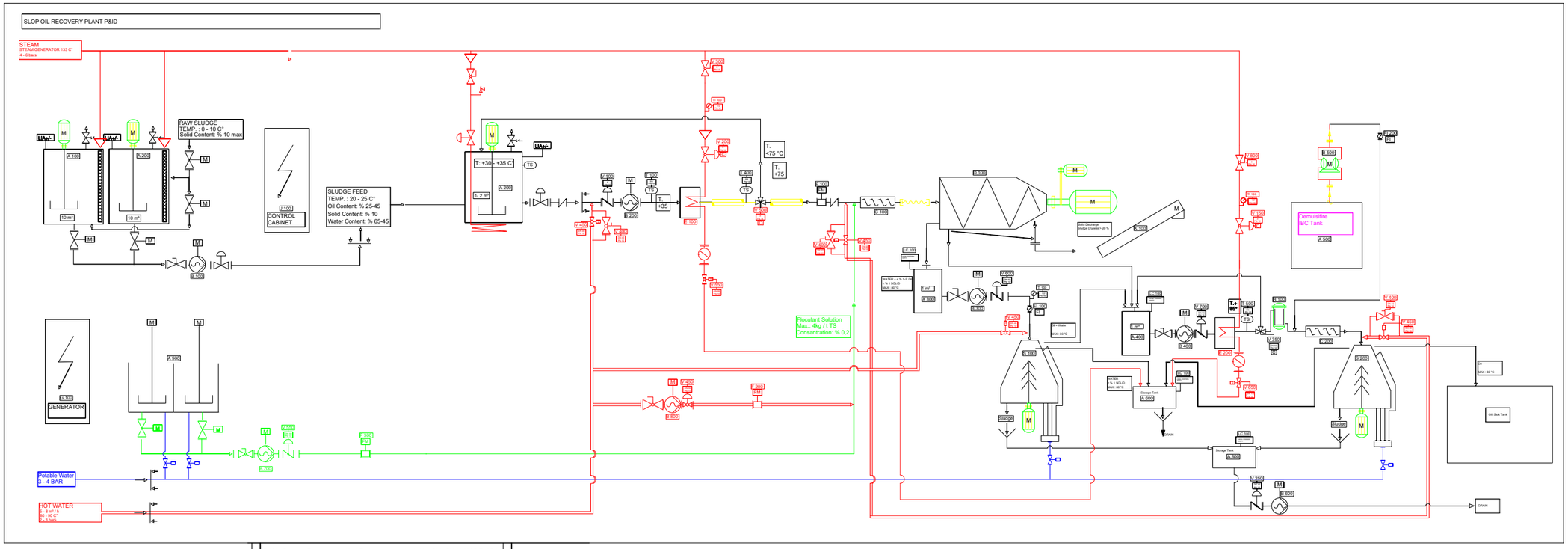

A 100 - 10 m³ Tank; 1.4571 - Agitator 11 Kw (II 2G Ex IIB) ; Serpantin, Level Switch, Manhole, Isolated; Over Pressure Valfe
A 100 - 10 m³ Tank; 1.4571 - Agitator 11 Kw (II 2G Ex IIB) ; Serpantine, Level Switch, Manhole, Isolated; Over Pressure Valfe
A 200 - 1 - 2 m³ Tank; 1.4571 - Agitator 5,5 Kw (II 2G Ex IIB) ; Level Switch, Manhole, Isolated; Over Pressure Valfe
A 300 - 1 m³ Tank; 1.4571 - Level Switch, Manhole, Isolated; Over Pressure Valfe
A 400 - 1 m³ Tank; 1.4571 - Level Switch, Manhole, Isolated; Over Pressure Valfe
A 500 - IBC - Demulsifire
A 600 - 500 lt Tank; 1.4571 - Level Switch, Manhole,
A 800 - 1 m³ Tank; 1.4571 - Level Switch, Manhole,
A 900 - 4 m³ Polymer Preperation Tank; AISI 316
B 100 - Sludge Pump to A 200; Monopump, 10 - 15 m³/h (II 2G Ex IIB)
B 200 - Sludge Pump to 3 Phase Decanter; Monopump, 8 - 10 m³/h (II 2G Ex IIB)
B 300 - Water Pump to S 100 Seperator (Consantration); Monopump, 4 - 8 m³/h (II 2G Ex IIB)
B 400 - Oil Pump to S 200 Seperator (Prufication); Monopump, 4 - 8 m³/h (II 2G Ex IIB)
B 500 - Demulsifire Pump to S 200 Seperator (Prufication); Dosage Pump, 4 - 10 lt/h (II 2G Ex IIB)
B 600 - Seperators Soids Diecharge Pump to Outside; Monopump, 5 - 10 m³/h (II 2G Ex IIB)
B 700 - Polymer Dosing Pump ; Monopump, 0,2 - 0,7 m³/h (II 2G Ex IIB)
B 800 - Water Pump for Dilution ; Monopump, 4 - 8 m³/h (II 2G Ex IIB)
C 100 - Static Mixer for Decanter Inlet; AISI 316; DN 80
C 200 - Static Mixer for S 200 Seperator Inlet; AISI 316; DN 50
D 100 - 3 Phase Decanter; 6 - 8 m³/h
E 100 - Spiral Type Heat Exchanger; Heating Up to 75 °C (II 2G Ex IIB)
E 200 - Plate Type Heat Exchanger; Heating Up to 95 °C (II 2G Ex IIB)
F 100 - Electromangnetic Flow Meter, Decanter Inlet; DN 65 (II 2G Ex IIB)
F 200 - Electromangnetic Flow Meter, Dilution water; DN 40 (II 2G Ex IIB)
F 300 - Electromangnetic Flow Meter, Polymer ; DN 40 (II 2G Ex IIB)
G 100 - Generator; Min 750 Kw
H 100 - Sand Filter;
J 100 - Electrical Control Cabinet; Air Conditioner, Gas Protection; Touch Screen (II 2G Ex IIB)
K 100 - Screew Conveyors, One Horizantal (4 Kw) - One Incline (4 Kw) (II 2G Ex IIB)
S 100 - High Speed Seperator for Consantration; 3 Phase ; 3 - 5 m³/h; (II 2G Ex IIB)
S 200 - High Speed Seperator for Prufication; 3 Phase ; 3 - 5 m³/h ; (II 2G Ex IIB)

V 100 - Pneumatic Actuator Butterfly valve - on/off - DN 100- PN 10 (II 2G Ex IIB)
T 100 - Temperature Transmitter - G 3/4' / PN10 (II 2G Ex IIB)
V 200 - Pneumatic Actuator Globe Valve - Flow Control - DN 80 - PN 16 (II 2G Ex IIB)

C 100 - Static Mixer for Decanter Inlet; AISI 316; DN 80
V 300 - Manual Control Globe Valve - DN 80 - PN 16 (II 2G Ex IIB)
V 400 - Manual Control Ball Valve - DN 40 PN 16
TI 100 - Temperature Indicator - 1/2' - PN 10
TI 200 - Temperature Manometer - 1/2' - PN 16
T 400 - Temperature Transmitter - G 3/4' / PN16 (II 2G Ex IIB)
V 500 - Pneumatic actuator 3 way control valve - DN80 - PN 10
T 500 - Temperature Transmitter - G 3/4' / PN16 (II 2G Ex IIB)
V 600 - Pneumatic Actuator Butterfly valve - on/off - DN 50- PN 10 (II 2G Ex IIB)
V 700 - Pneumatic Actuator Butterfly valve - on/off - DN 50- PN 10 (II 2G Ex IIB)
V 800 - Manual Control Globe Valve - DN 100 - PN 16 (II 2G Ex IIB)
V 900 - Pressure Relief Valve - 1' - PN 16
V 150 -Pneumatic Actuator Globe Valve - Flow Control - DN 100 - PN 16 (II 2G Ex IIB)

P 100 - Pressure Transmitter for Heat Exchanger steam inlet side - 3/4' - PN 16 (II 2G Ex IIB)
T 200 - Temperature Transmitter - G 3/4' / PN16 (II 2G Ex IIB)
P 200 - Pressure Transmitter for Heat Exchanger steam outlet side - 3/4' - PN 16 (II 2G Ex IIB)
T 300 - Temperature Transmitter - G 3/4' / PN16 (II 2G Ex IIB)
V 250 - Pneumatic Actuator Butterfly valve - on/off - DN 50- PN 10 (II 2G Ex IIB)
V 350 - Pneumatic actuator 3 way control valve - DN80 - PN 10 (II 2G Ex IIB)
LC 100 - Level control Switch - G 1/2 (II 2G Ex IIB)
V 450 - Pneumatic Actuator Butterfly valve - on/off - DN 50- PN 10 (II 2G Ex IIB)
V 550 - Pneumatic Actuator Butterfly valve - on/off - DN 50- PN 10 (II 2G Ex IIB)
FI 100 - Flow Indicator - DN 50
FI 200 - Flow Indicator - DN 50
V 450 - Pneumatic actuator Ball Valve- on/off - DN40 - PN 10 (II 2G Ex IIB)
V 550 - Pneumatic actuator Valve- on/off - DN 80 - PN 10 (II 2G Ex IIB)

Açıklamalar /Description: Slope oil Recovery P&ID						RESİM ÜZERİNDEN ÖLÇÜ ALINMAZ./DO NOT SCALE THIS DRAWING
	İSİM / NAME	İMZA / SIGN	TARİH / DATE			SEKTÖR ADI / SECTOR NAME: Petroluem
ÇİZEN / DRAWN by	Onur ÖDER		23.07.2020	01	01	23.07.2020
KONTROLÜ / CHECKED	İlker YILDIRIM		23.07.2020	SIRA/ KOW	REVİZYON NO/ REVISION NO	REVİZYON TARİHİ/ REVISION DATE
ONAY/ APPROVED	Engin AYDINOĞLU		23.07.2020	R E V İ Z Y O N / R E V I S I O N		
				SON KAYIT TARİHİ/ LAST SAVE DATE	23.07.2020	

MAKİNE ADI / MACHINE NAME: 3 Phase Decanter / 3 Phase Seperator (Prufi.) / 3 Phase Seperator (Cons.)
MODEL ADI / YILI / MODEL NAME / YEAR:
CUSTOMER NAME: Ecologica spa
MALZEME / MATERIAL:
PARÇA NO / PART NO:
RESİM NO/ DRAWING NO: R1
A3
AĞIRLIK / WEIGHT:
ÖLÇEK / SCALE:
ADET / PIECE: 1

POLAT MAKİNA SAN. ve TİC. A.Ş.

All rights reserved.Copyright in this document is owned by POLAT Makina San. ve Tic. A.Ş.
No part of this document may be used or reproduced in any form and made available to any third parties wihout the express written permission of POLAT Makina San. ve Tic. A.Ş.